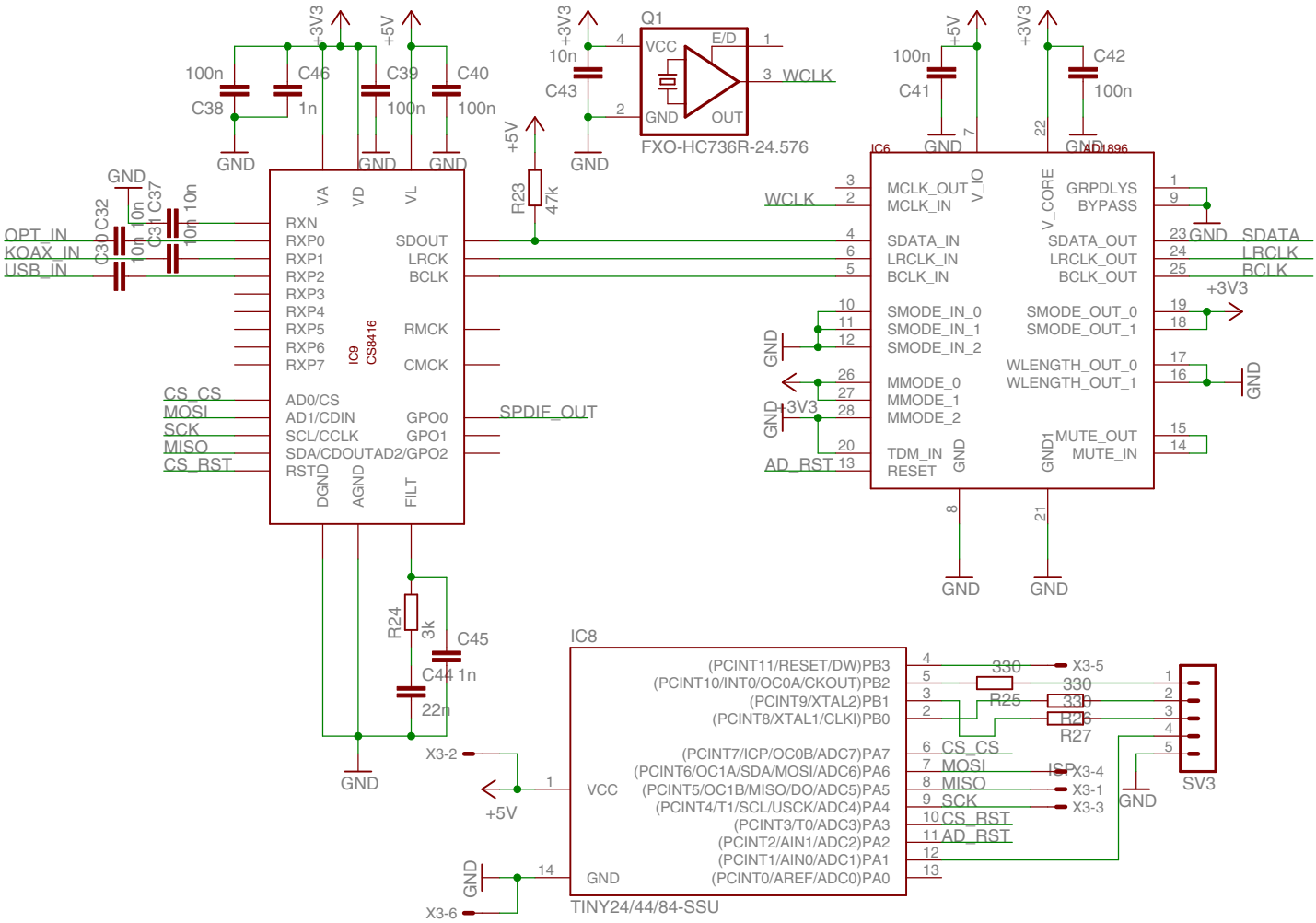
Q1
VCC
E/D
GND
OUT
WCLK
FXO-HC736R-24.576
+3V3
+5V
100n
C38
C46
1n
C39
100n
C40
100n
C43
10n
C41
100n
C42
100n
R23
47k
GND
OPT_IN
KOAX_IN
USB_IN
C30 C32
C31 C37
10n
IC9
CS8416
VA
VD
VL
RXN
RXP0
RXP1
RXP2
RXP3
RXP4
RXP5
RXP6
RXP7
SDOUT
LRCK
BCLK
RMCK
CMCK
AD0/CS
AD1/CDIN
SCL/CCLK
SDA/CDOUT
RST
GPO0
GPO1
AD2/GPO2
DGND
AGND
FILT
CS_CS
MOSI
SCK
MISO
CS_RST
SPDIF_OUT
IC6
AD1896
MCLK_OUT
MCLK_IN
V_IO
V_CORE
GRPDLYS
BYPASS
SDATA_IN
LRCLK_IN
BCLK_IN
SDATA_OUT
LRCLK_OUT
BCLK_OUT
SDATA
LRCLK
BCLK
SMODE_IN_0
SMODE_IN_1
SMODE_IN_2
SMODE_OUT_0
SMODE_OUT_1
WLENGTH_OUT_0
WLENGTH_OUT_1
MMODE_0
MMODE_1
MMODE_2
TDM_IN
RESET
GND1
MUTE_OUT
MUTE_IN
AD_RST
R24
3k
C45
C44 1n
22n
IC8
(PCINT11/RESET/DW)PB3
(PCINT10/INT0/OC0A/CKOUT)PB2
(PCINT9/XTAL2)PB1
(PCINT8/XTAL1/CLKI)PB0
(PCINT7/ICP/OC0B/ADC7)PA7
(PCINT6/OC1A/SDA/MOSI/ADC6)PA6
(PCINT5/OC1B/MISO/DO/ADC5)PA5
(PCINT4/T1/SCL/USCK/ADC4)PA4
(PCINT3/T0/ADC3)PA3
(PCINT2/AIN1/ADC2)PA2
(PCINT1/AIN0/ADC1)PA1
(PCINT0/AREF/ADC0)PA0
VCC
GND
TINY24/44/84-SSU
330
R25
R26
R27
X3-5
X3-4
X3-1
X3-3
X3-2
X3-6
ISP
SV3

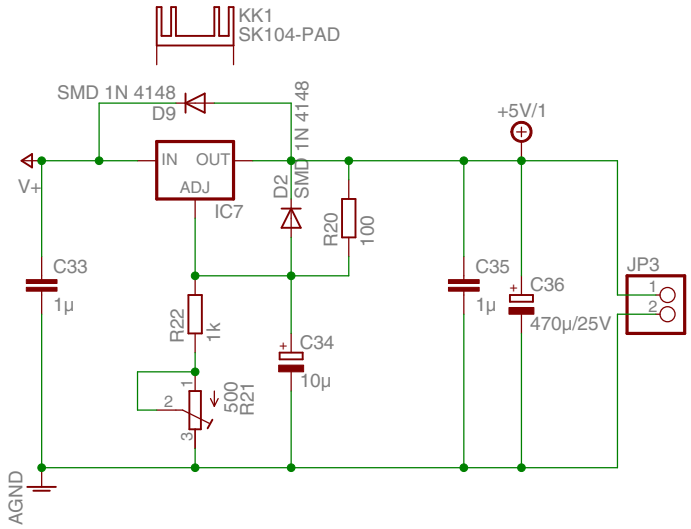
KK1
SK104-PAD
SMD 1N 4148
D9
SMD 1N 4148
+5V/1
IN
OUT
ADJ
IC7
V+
D2
SMD 1N 4148
R20
100
C33
1µ
C35
1µ
C36
470µ/25V
JP3
1
2
R22
1k
C34
10µ
500
R21
AGND

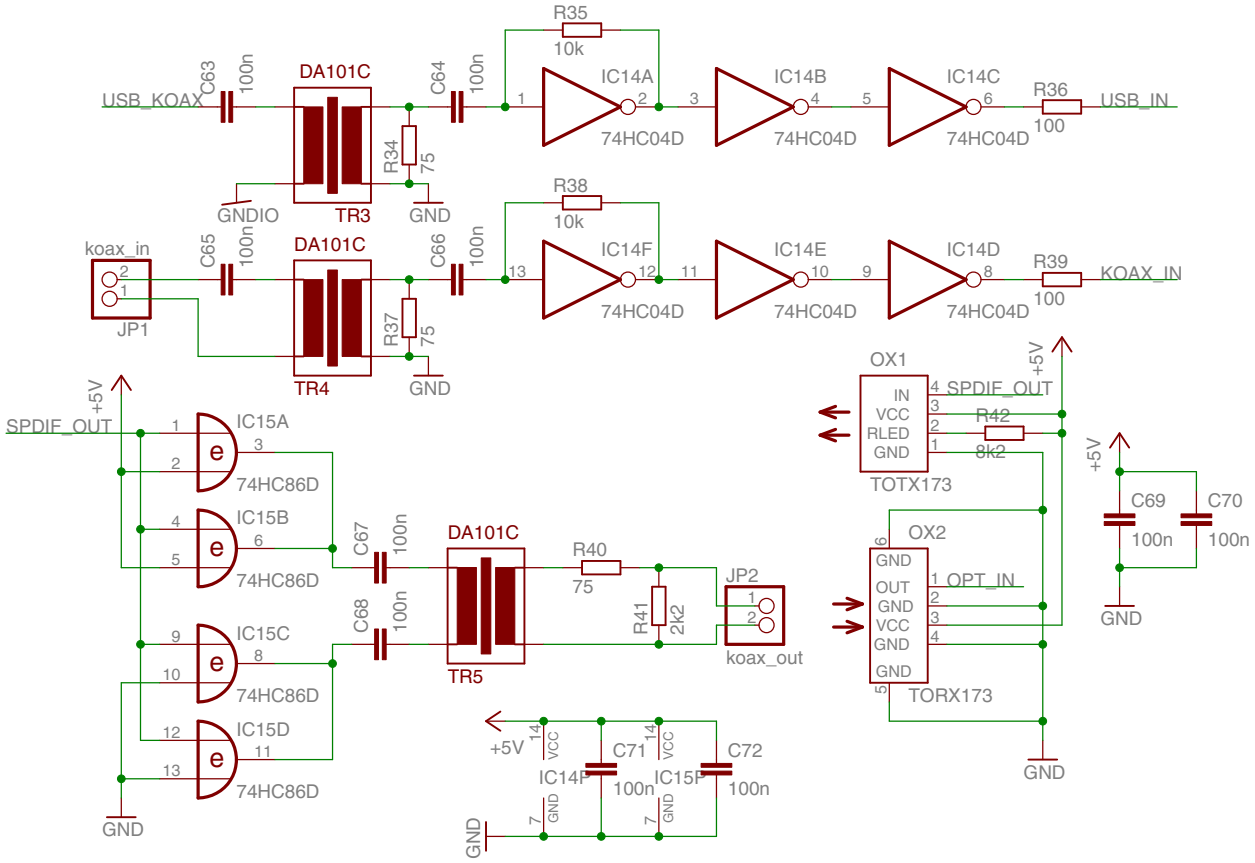
USB_KOAX
C63
100n
DA101C
TR3
GNDIO
R34
75
GND
C64
100n
R35
10k
IC14A
74HC04D
IC14B
74HC04D
IC14C
74HC04D
R36
100
USB_IN
koax_in
JP1
C65
100n
DA101C
TR4
R37
75
GND
C66
100n
R38
10k
IC14F
74HC04D
IC14E
74HC04D
IC14D
74HC04D
R39
100
KOAX_IN
+5V
SPDIF_OUT
IC15A
74HC86D
IC15B
74HC86D
IC15C
74HC86D
IC15D
74HC86D
GND
C67
100n
C68
100n
DA101C
TR5
R40
75
R41
2k2
JP2
koax_out
+5V
IC14F
C71
100n
IC15F
C72
100n
GND
OX1
IN
VCC
RLED
GND
TOTX173
SPDIF_OUT
R42
8k2
+5V
C69
100n
C70
100n
GND
OX2
GND
OUT
GND
VCC
GND
GND
TORX173
OPT_IN
GND

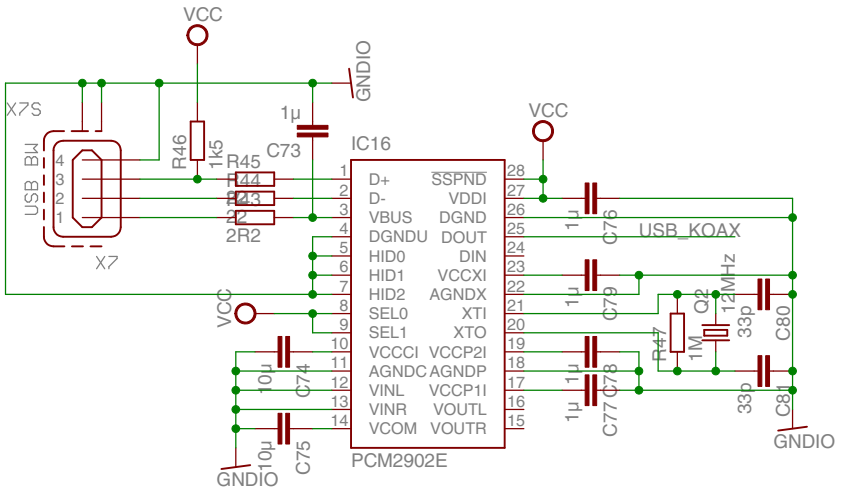
VCC
GNDIO
X7S
USB_B
X7
R46
1k5
R45
R44
R43
R42
2R2
1µ
C73
IC16
D+
D-
VBUS
DGNDU
HID0
HID1
HID2
SEL0
SEL1
VCCCI
AGNDC
VINL
VINR
VCOM
SSPND
VDDI
DGND
DOUT
DIN
VCCXI
AGNDX
XTI
XTO
VCCP2I
AGNDP
VCCP1I
VOUTL
VOUTR
PCM2902E
C76
C79
C78
C77
USB_KOAX
Q2
12MHz
R47
1M
33p
C80
C81
C74
C75
10µ

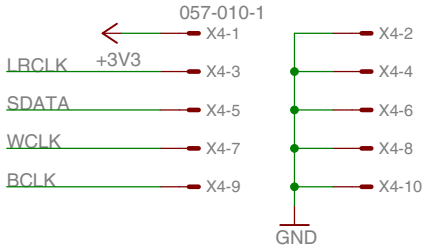
057-010-1
X4-1
+3V3
LRCLK
X4-3
SDATA
X4-5
WCLK
X4-7
BCLK
X4-9
X4-2
X4-4
X4-6
X4-8
X4-10
GND

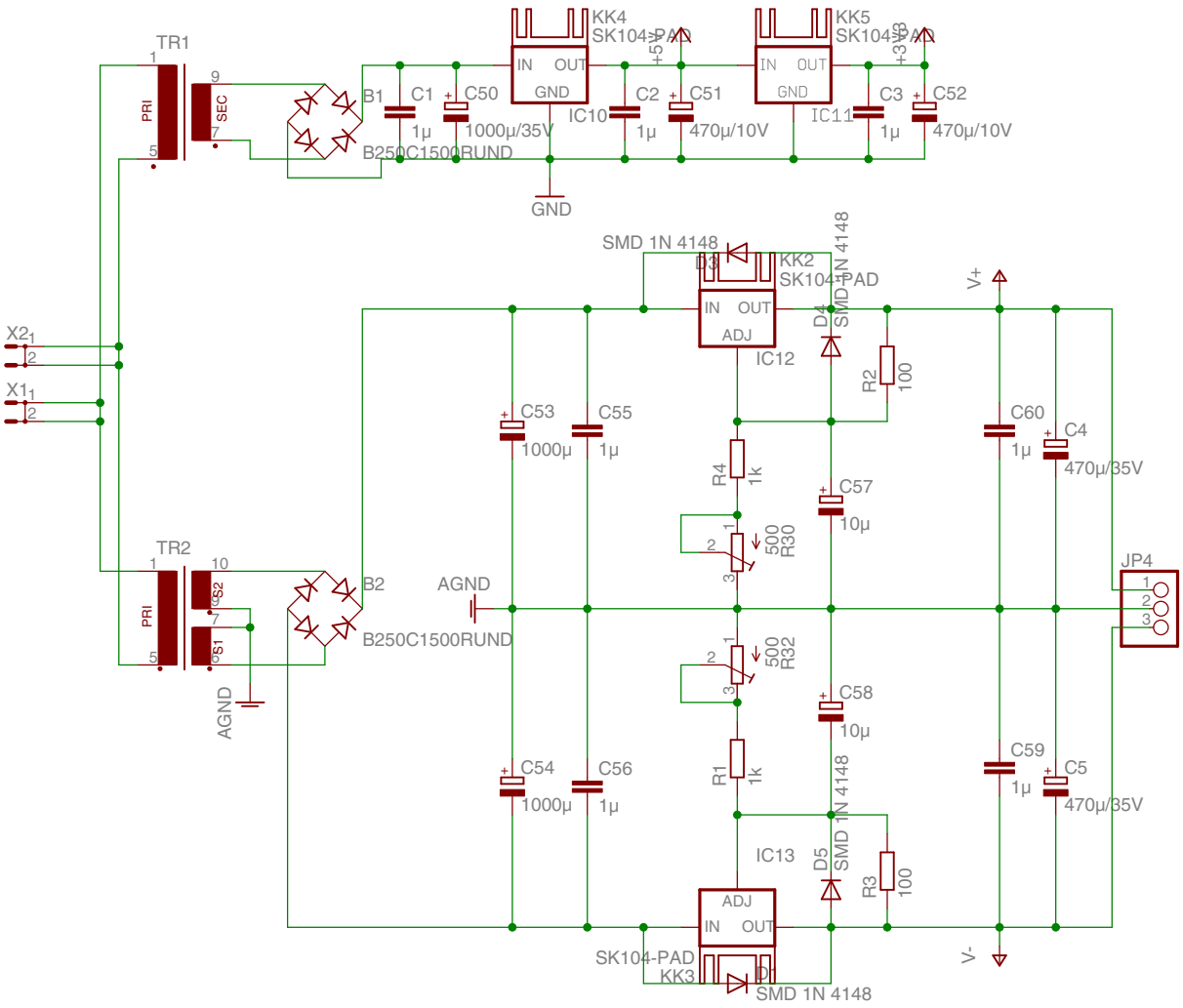
TR1
PRI
SEC
B1
C1
1µ
C50
1000µ/35V
B250C1500RUND
KK4
SK104-PAD
IN
OUT
GND
IC10
+5V
C2
1µ
C51
470µ/10V
KK5
SK104-PAD
IC11
+3V3
C3
1µ
C52
470µ/10V
GND
SMD 1N 4148
D3
KK2
SK104-PAD
ADJ
IC12
D4
SMD 1N 4148
V+
R2
100
X2
X1
C53
1000µ
C55
1µ
R4
1k
C57
10µ
C60
1µ
C4
470µ/35V
500
R30
TR2
PRI
S2
S1
B2
AGND
B250C1500RUND
JP4
500
R32
C58
10µ
C54
1000µ
C56
1µ
R1
1k
C59
1µ
C5
470µ/35V
IC13
D5
SMD 1N 4148
R3
100
ADJ
SK104-PAD
KK3
D1
SMD 1N 4148
V-

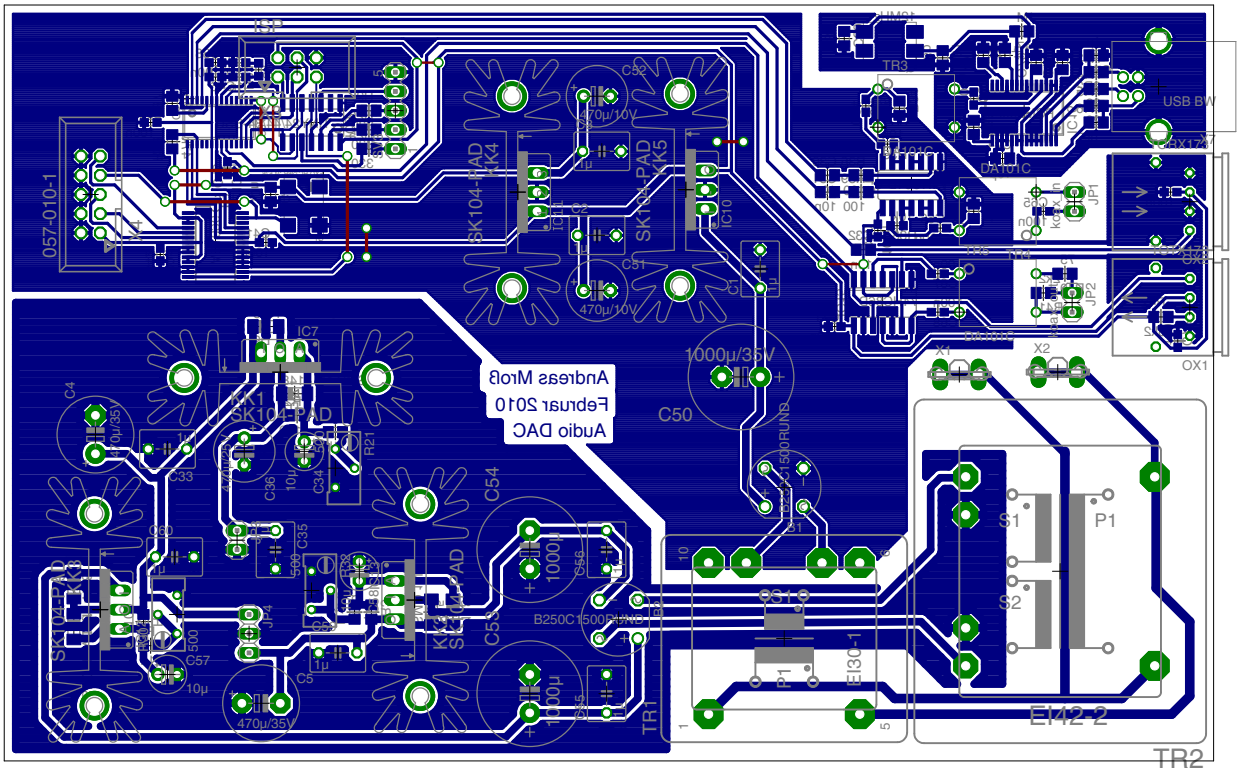

18.05.2010 17:25:01 C:\Users\Andy\Documents\eagle\dac\gesamt.brd

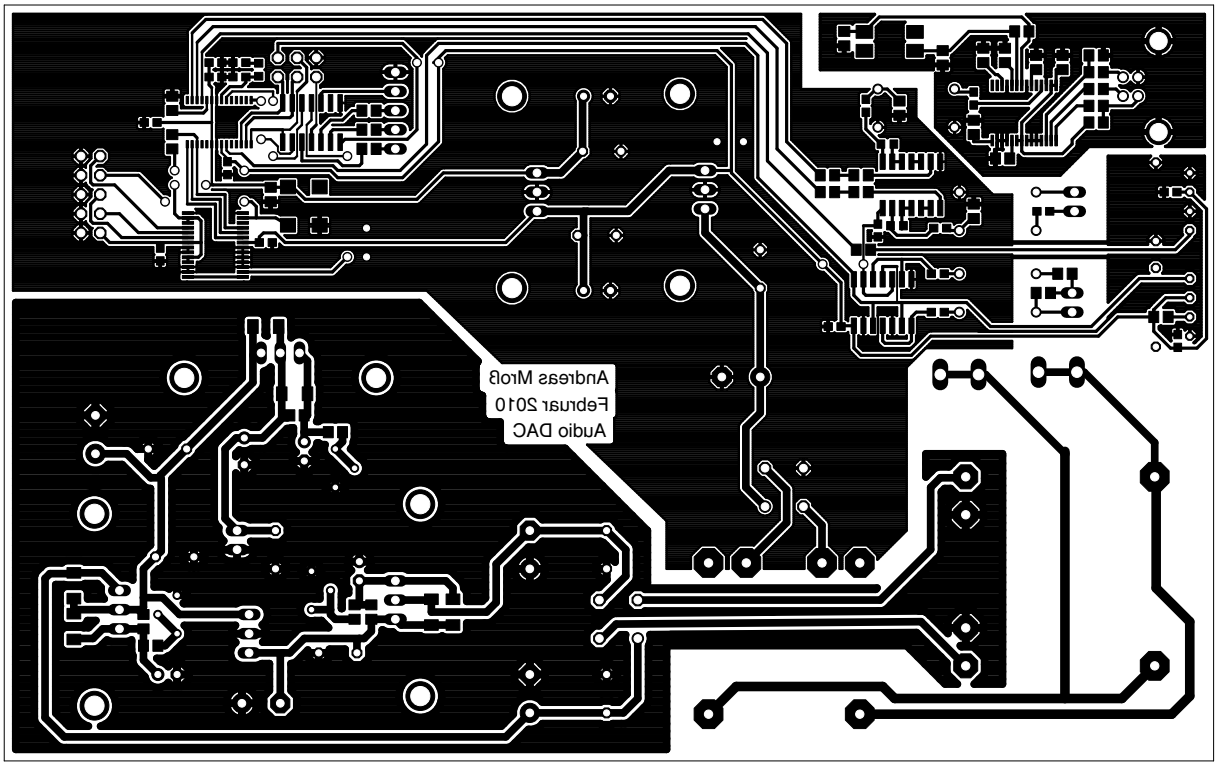
Andreas Mrotz
Februar 2010
Audio DAC