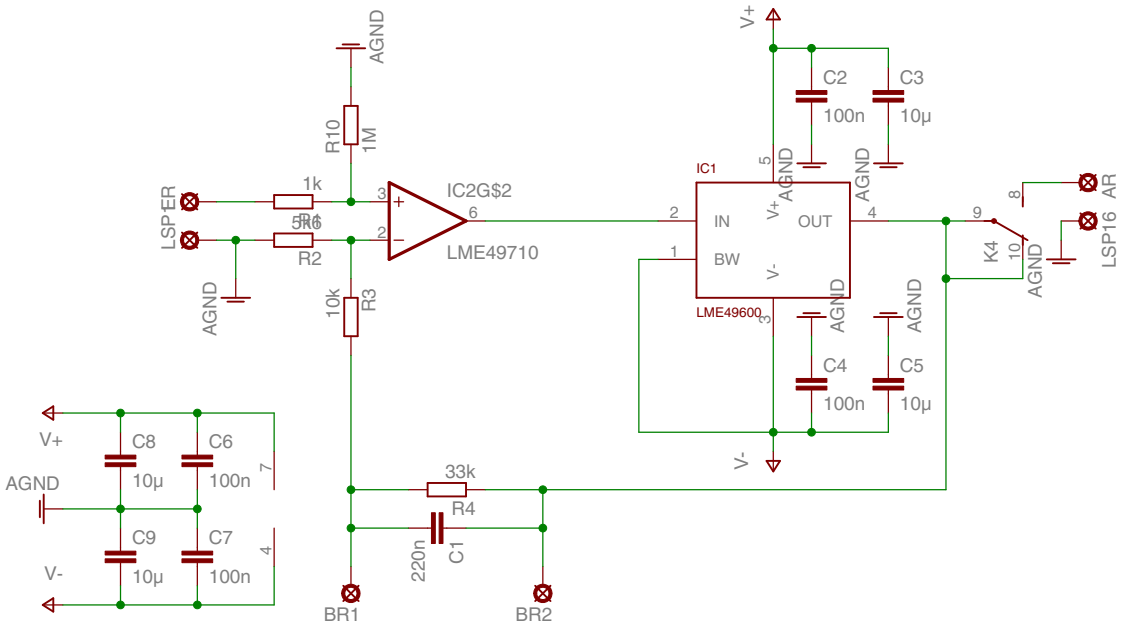
AGND
R10
1M
LSP ER
1k
R6
5k6
R2
AGND
IC2G$2
LME49710
10k
R3
V+
C2
100n
C3
10µ
IC1
IN
OUT
BW
V+
V-
LME49600
C4
100n
C5
10µ
K4
LSP16 AR
V-
V+
AGND
C8
10µ
C6
100n
C9
10µ
C7
100n
33k
R4
220n
C1
BR1
BR2

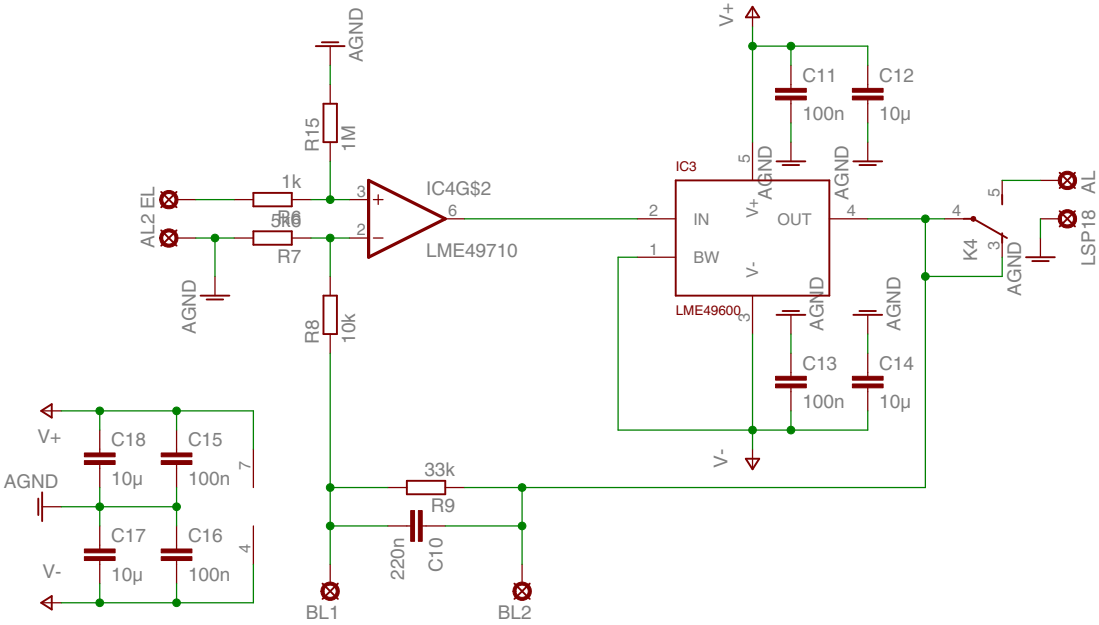
AGND
R15
1M
1k
R6
5k6
R7
AL2 EL
AGND
R8
10k
IC4G$2
LME49710
V+
C11
100n
C12
10µ
IC3
IN
OUT
BW
V+
V-
LME49600
C13
100n
C14
10µ
V-
K4
AL
LSP18
V+
C18
10µ
C15
100n
AGND
C17
10µ
C16
100n
V-
33k
R9
220n
C10
BL1
BL2

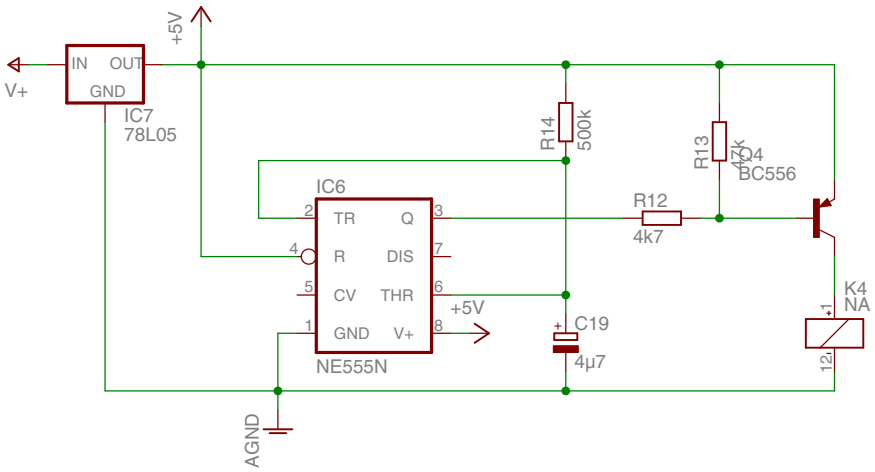
+5V
IN
OUT
GND
V+
IC7
78L05
R14
500k
R13
47k
Q4
BC556
IC6
TR
Q
R
DIS
CV
THR
GND
V+
NE555N
R12
4k7
+5V
C19
4µ7
K4
NA
AGND

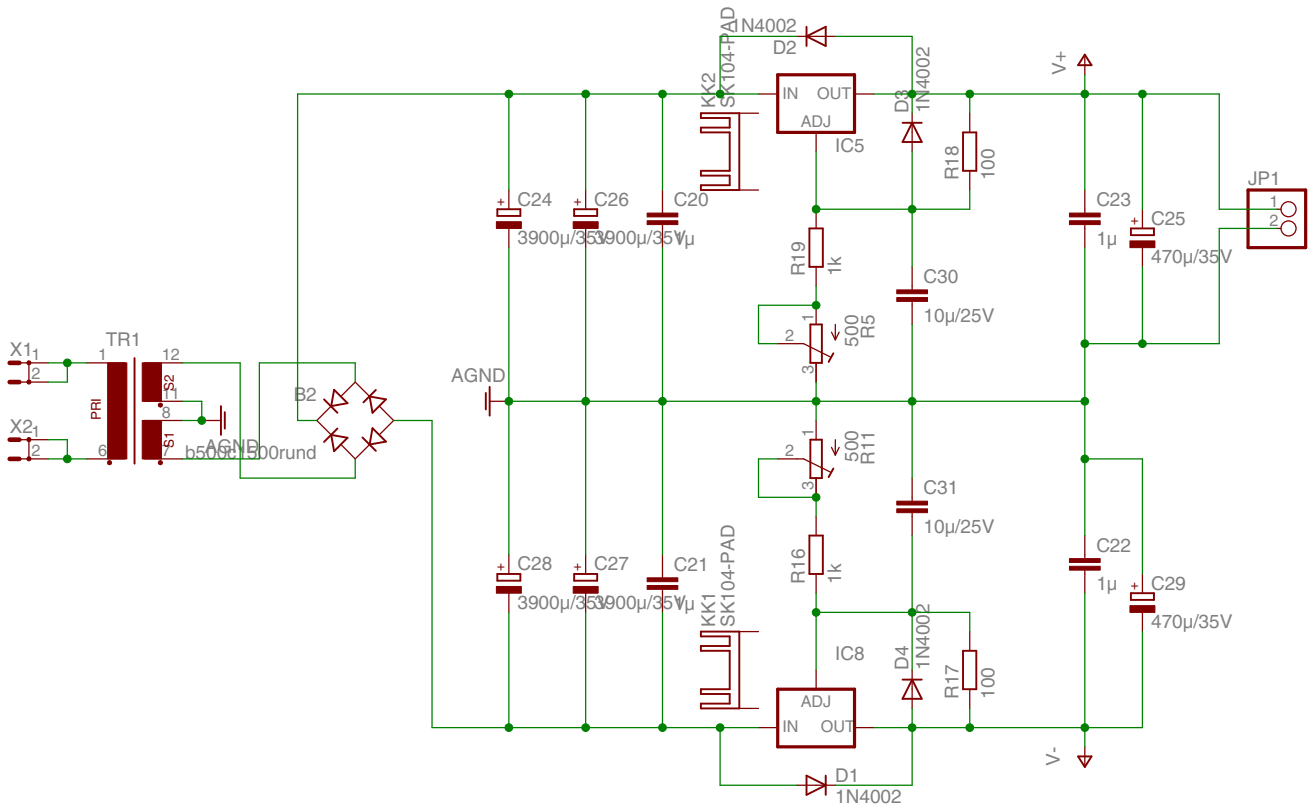
1N4002
D2
KK2
SK104-PAD
IN
OUT
ADJ
IC5
D3
1N4002
R18
100
V+
JP1
C24
C26
C20
3900µ/35V
3900µ/35V
1µ
R19
1k
C30
10µ/25V
C23
1µ
C25
470µ/35V
500
R5
X1
TR1
12
PRI
S2
S1
X2
AGND
B2
b500r1500rund
AGND
500
R11
C31
10µ/25V
C28
C27
C21
3900µ/35V
3900µ/35V
1µ
R16
1k
KK1
SK104-PAD
IC8
D4
1N4002
R17
100
C22
1µ
C29
470µ/35V
V-
D1
1N4002

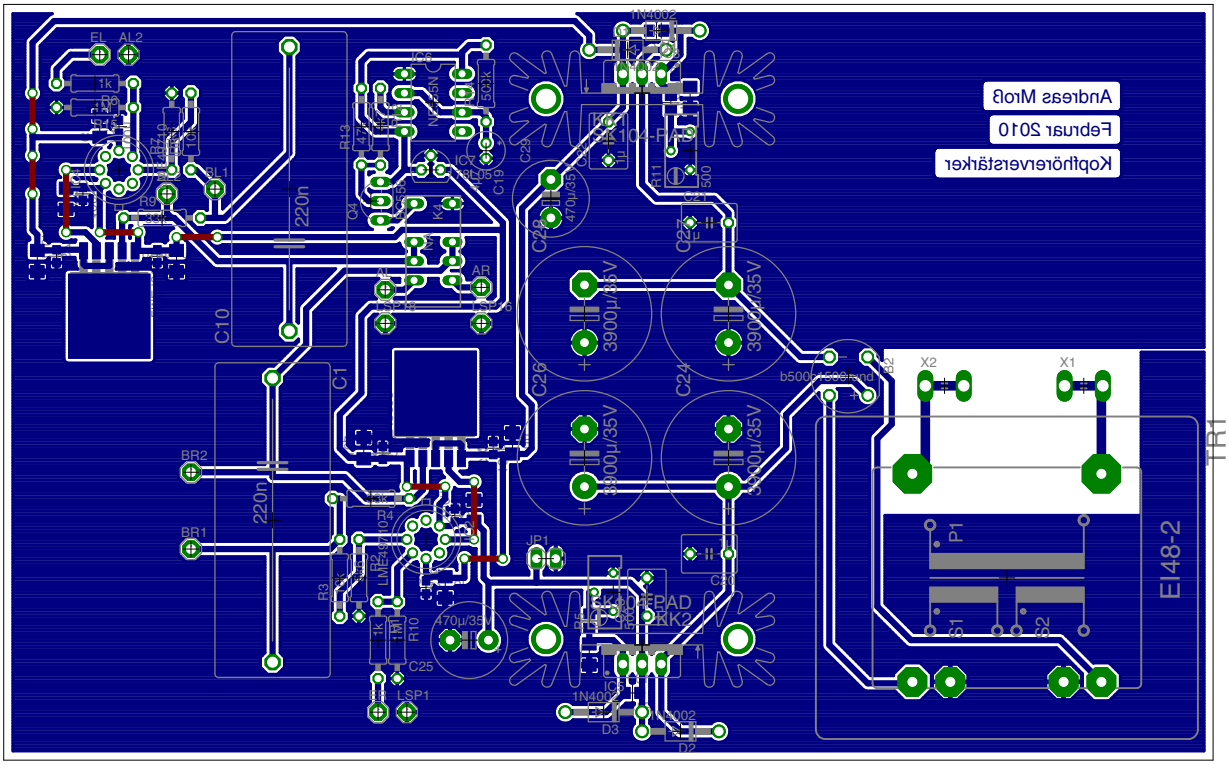
Andreas Mrog
Februar 2010
Kopfhörerverstärker
EL
AL2
1k
R6
R5
R7
R9
BL1
R8
C10
220n
C1
BR2
BR1
R13
R12
IC3
NE5532N
IC2
TL052
C19
C28
C20
470µ/35
C22
R11
500
1N4002
D1
IC1
TL084
K1
K2
AR
AL
R14
R15
R16
R17
R18
R19
R20
R21
R22
R23
R24
R25
R26
R27
R28
R29
R30
R31
R32
R33
R34
R35
R36
R37
R38
R39
R40
R41
R42
R43
R44
R45
R46
R47
R48
R49
R50
R51
R52
R53

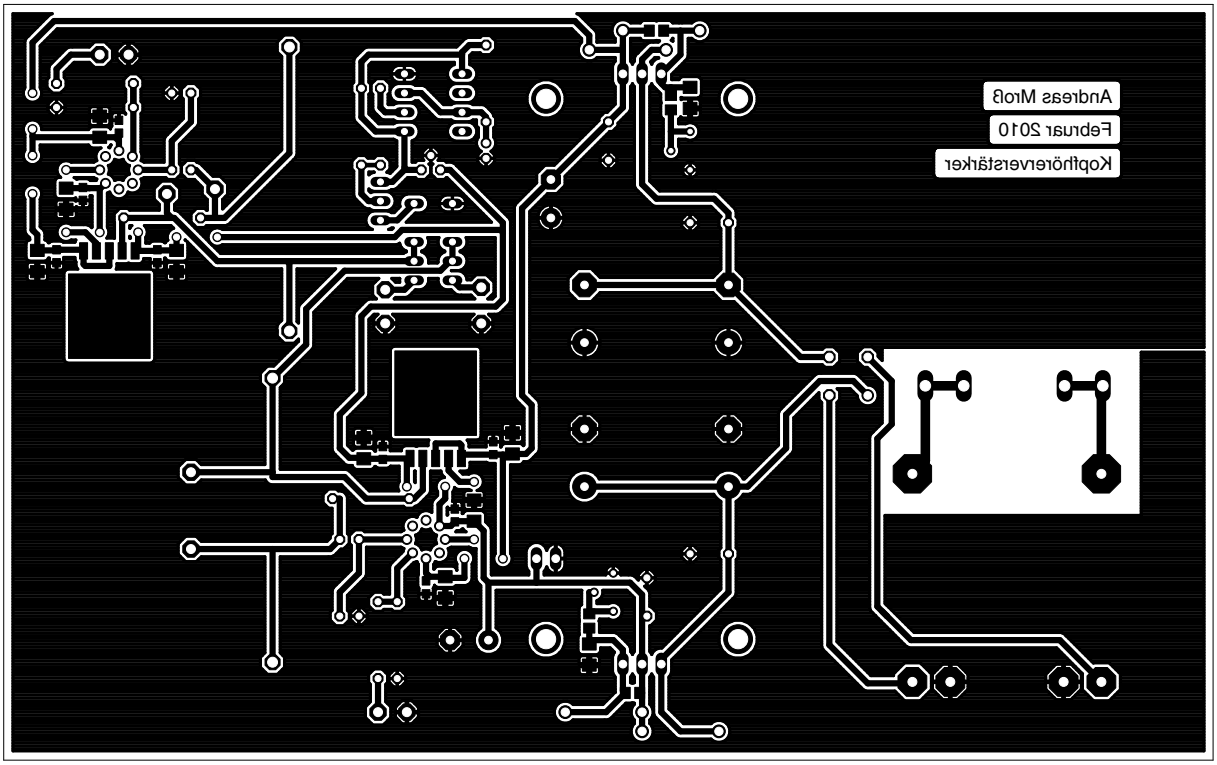

18.05.2010 17:23:23 C:\Users\Andy\Documents\eagle\khv\khv.brd